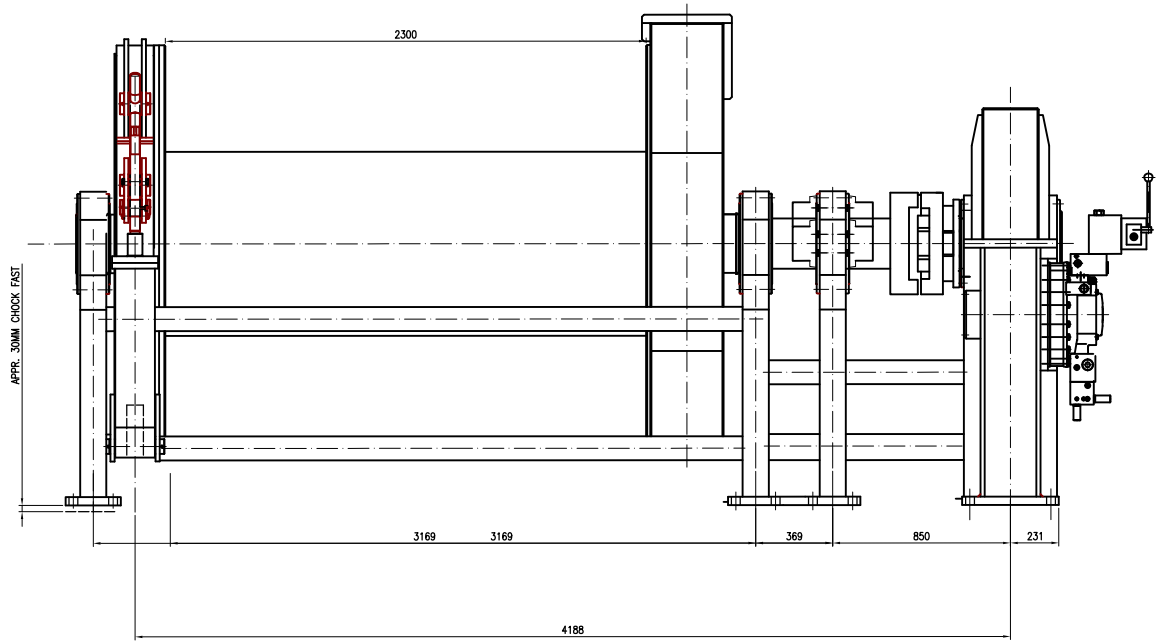

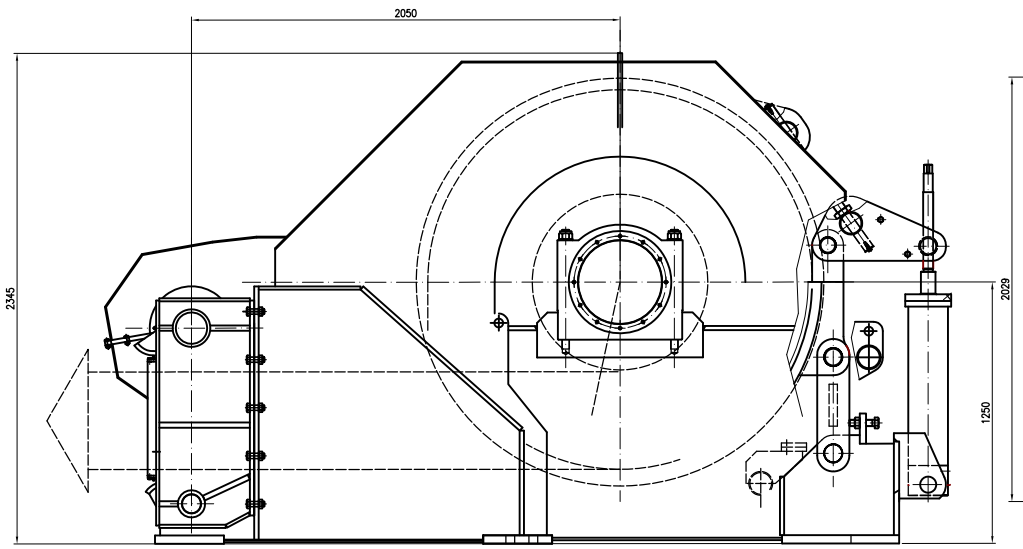

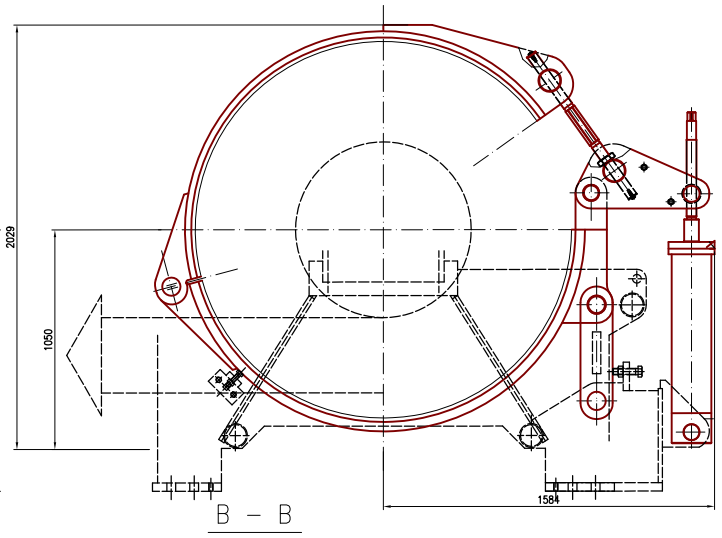

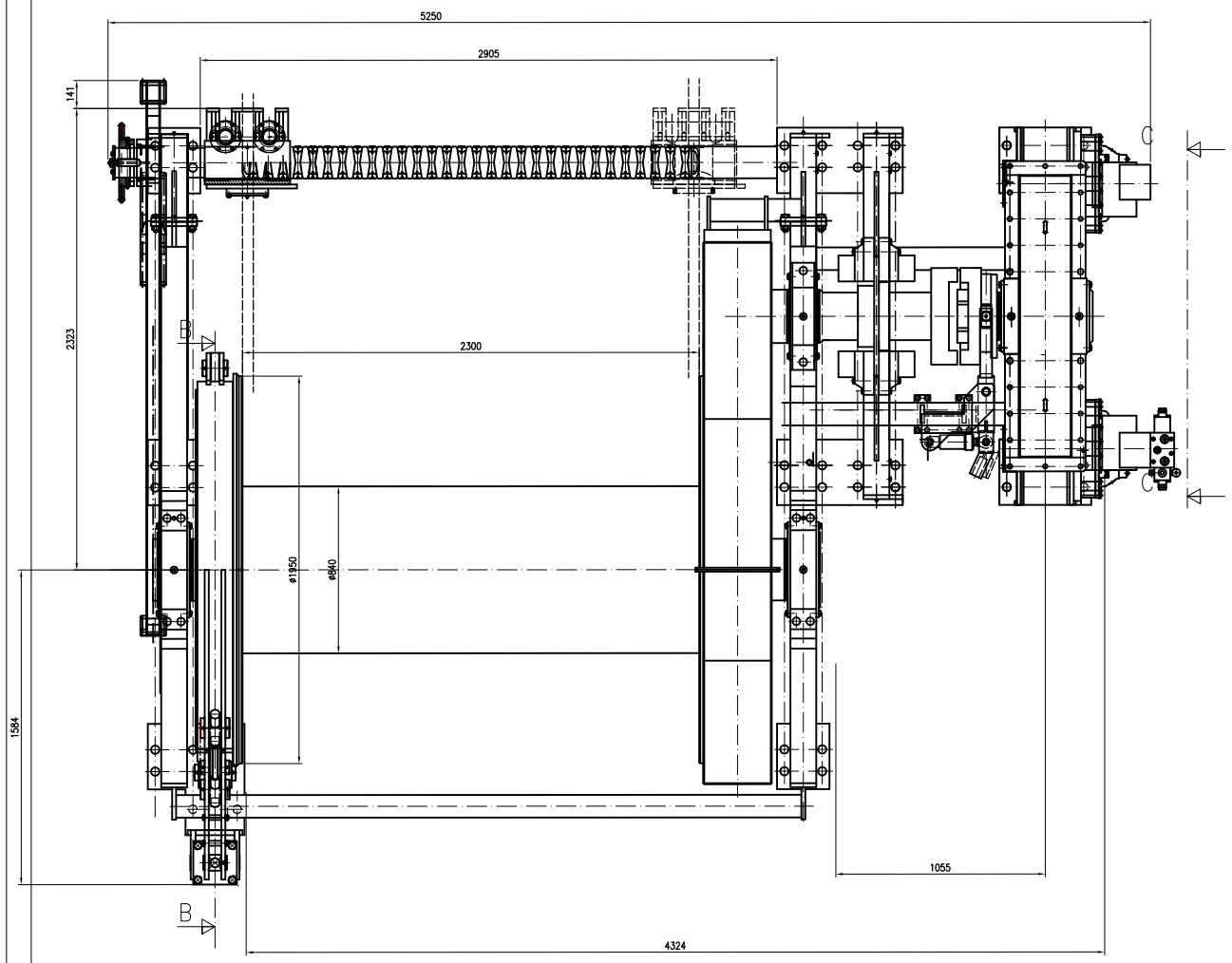

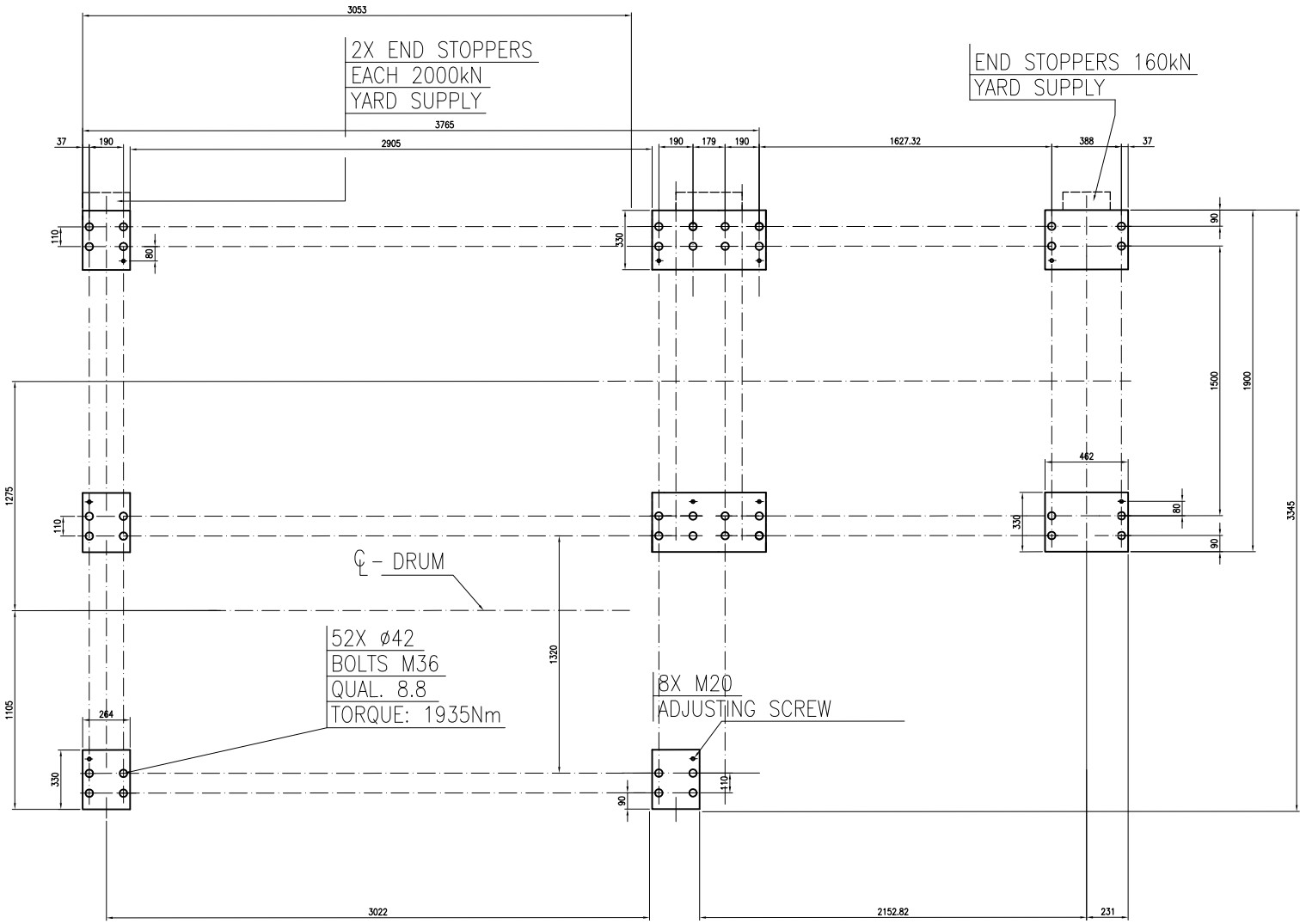

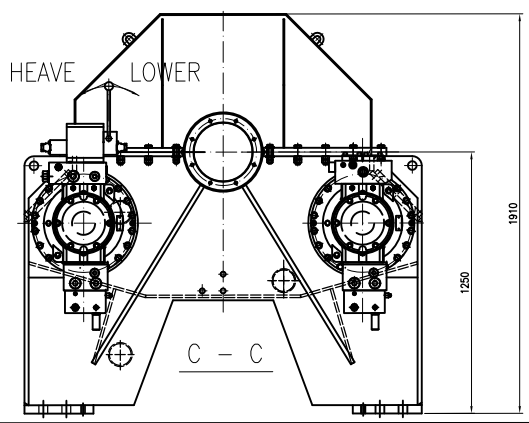

PULLING FORCE 40TONNES @ 10M/MIN AT FIRST LAYER

BRAKE HOLDING FORCE 150 TONNES "FAIL SAFE AT FIRST LAYER"

PRELIMINARY DRAWING

															app.24000KG
Item no.	Quant.	Part name / Dimension								Ident./Art. Part. no. Patteren/Blank no.		Material Standard Type		Alt. material Alt. standard Maker	Weight Remarks
General tolerances: ISO 2768-1-m. Welding tolerances: NS1432, Class A.															
K	H	G	F	E	D	C	B	A		Revisions	Type/Group	Sign.: GPo		Part list:	
										Sign.:		Date: 18.12.2009		Replaced by:	
										Date:	Scale	Checked:		Replaces:	
										Checked:	1:25	Approved:		Ref.:	

NDM
Norwegian Deck Machinery AS

40 TONNES MOORING WINCH

Drawing no.
965-23-02